BLAUPUNKT

AUTORADIO

Trier RCR 126
7 646 707 010

8 622 400 875 KR 08/96

Schaltbild • Circuit diagramm • Schema du poste • Esquema del aparato

(D)	(GB)	(F)	(E)
Weitere Dokumentationen	**Supplementary documentation**	**Documentation supplementaire**	**Documentación suplementaria**
Serviceanleitung 8 622 400 212	Service manual 8 622 400 212	Manuel de service 8 622 400 212	Manual de servicio 8 622 400 212
Ersatzteilliste 8 622 400 909	Spare parts list 8 622 400 909	Liste de rechanges 8 622 400 909	Lista de repuestos 8 622 400 909

Schalterplatte
Keyboard
PL 8301 A05 V00

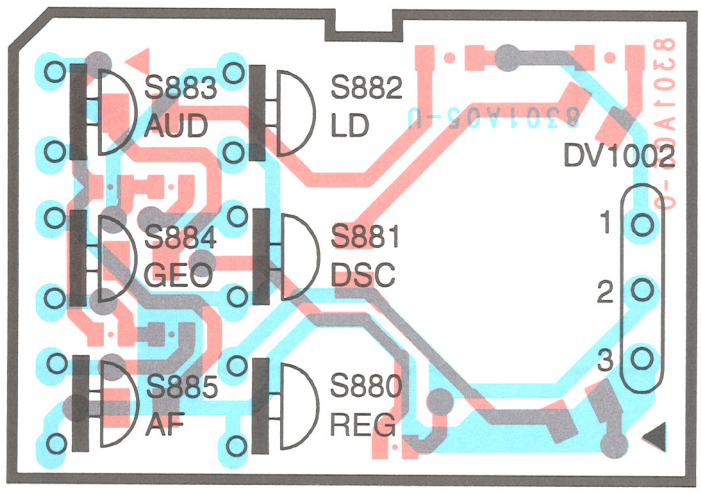

DV1002
1 = U14.2
2 = TAST1
3 = MASSE

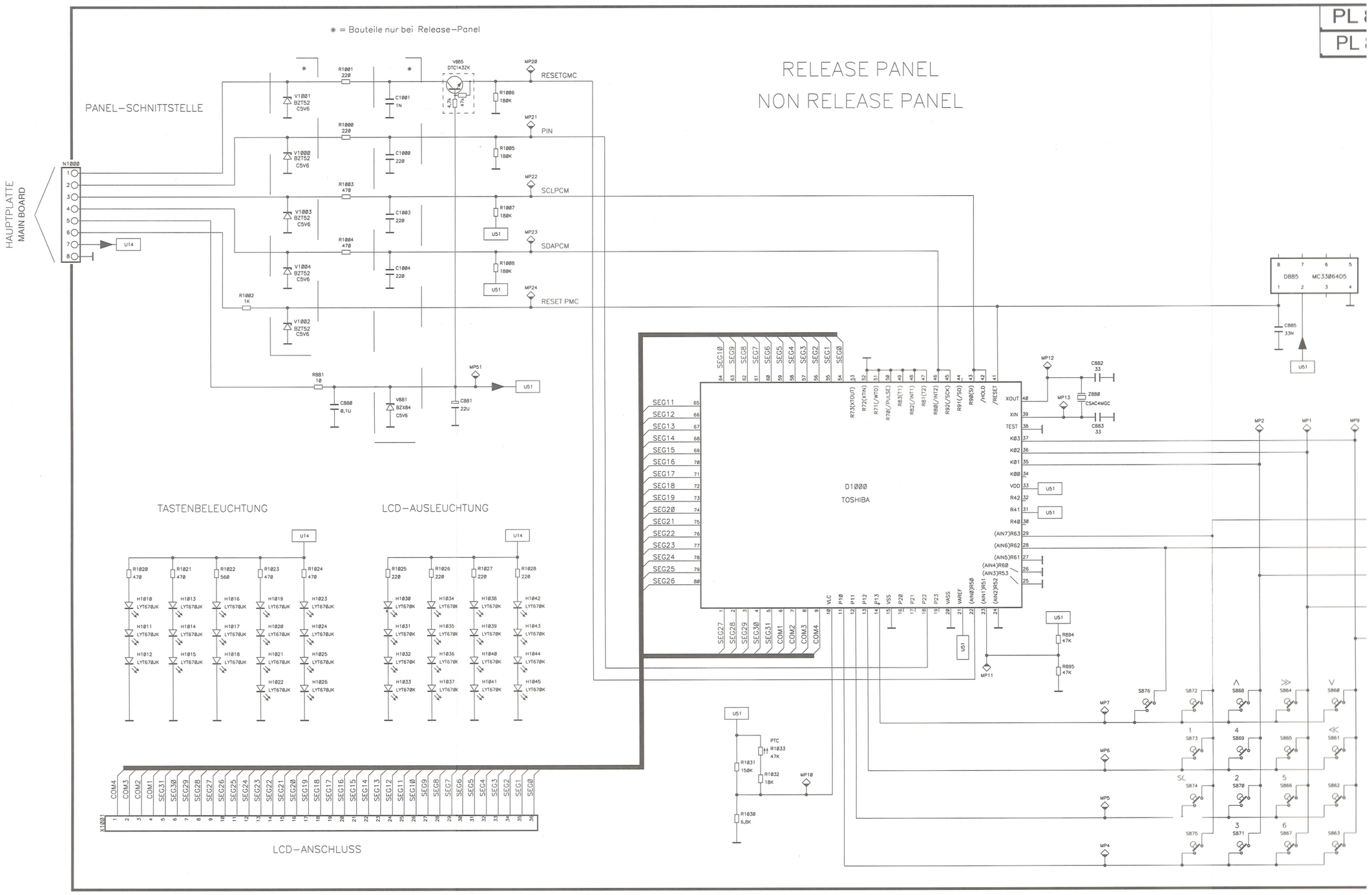

* = Bauteile nur bei Release-Panel
RELEASE PANEL
NON RELEASE PANEL
PANEL-SCHNITTSTELLE
HAUPTPLATTE
MAIN BOARD
N1000
RESETGMC
PIN
SCLPCM
SDAPCM
RESET PMC
TASTENBELEUCHTUNG
LCD-AUSLEUCHTUNG
LCD-ANSCHLUSS
D1000
TOSHIBA
D885
MC33064D5

PL 8424 A1

PL 8300 A6

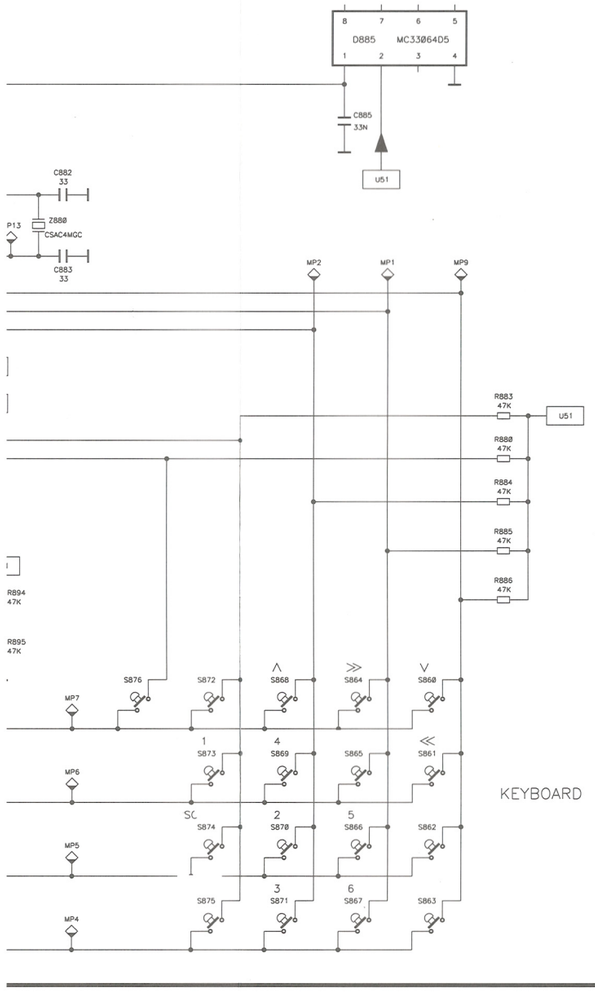

Panel-Platte
Panel board
PL 8300 A06 V00
Chip

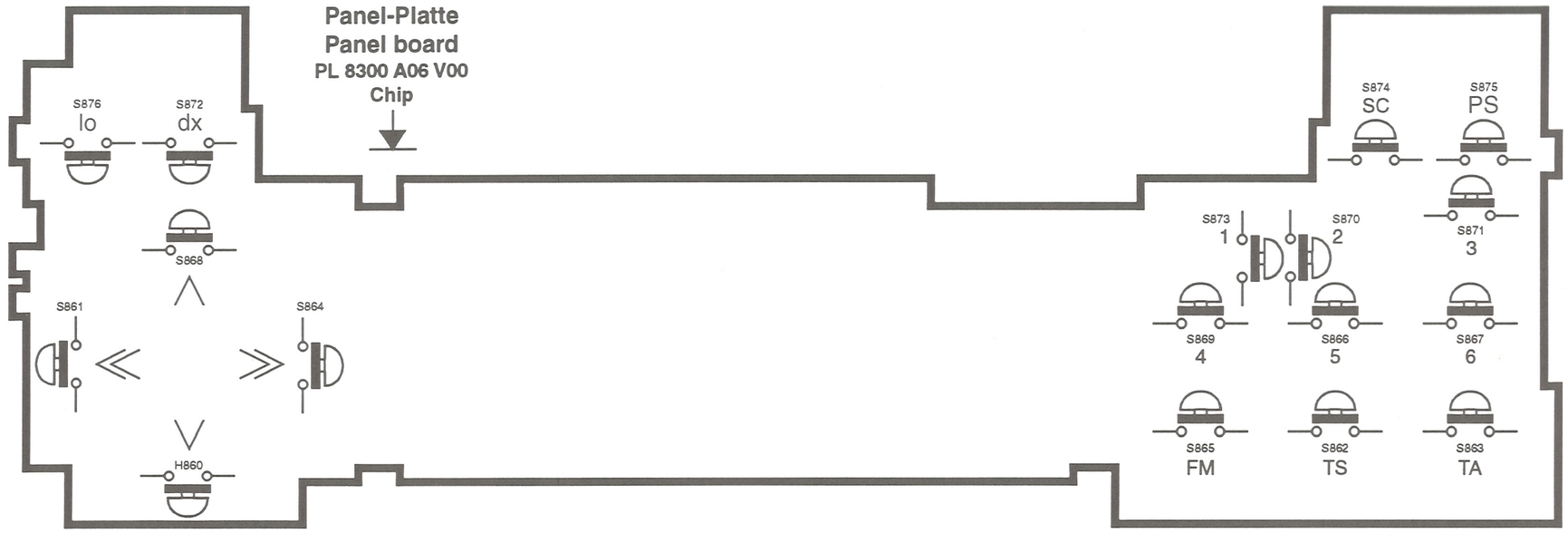

Panel-Platte
Panel board
PL 8300 A06 V00
Chip

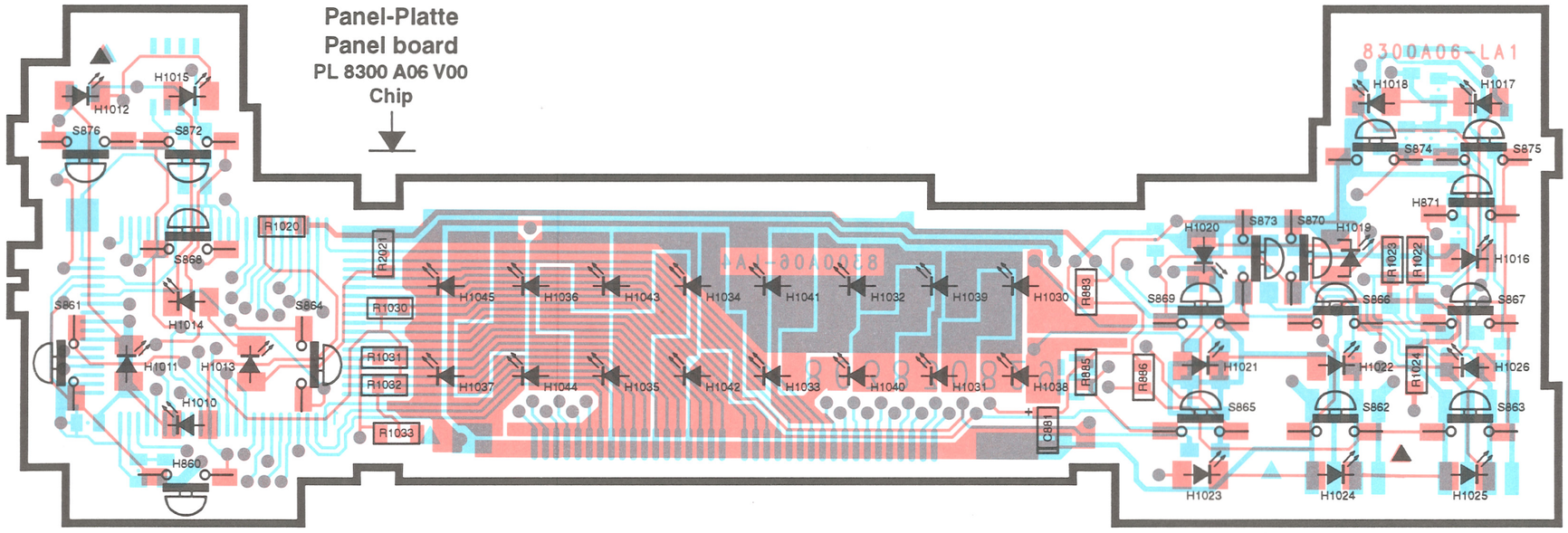

Panel-Platte
Panel board
PL 8300 A06 V00
Chip

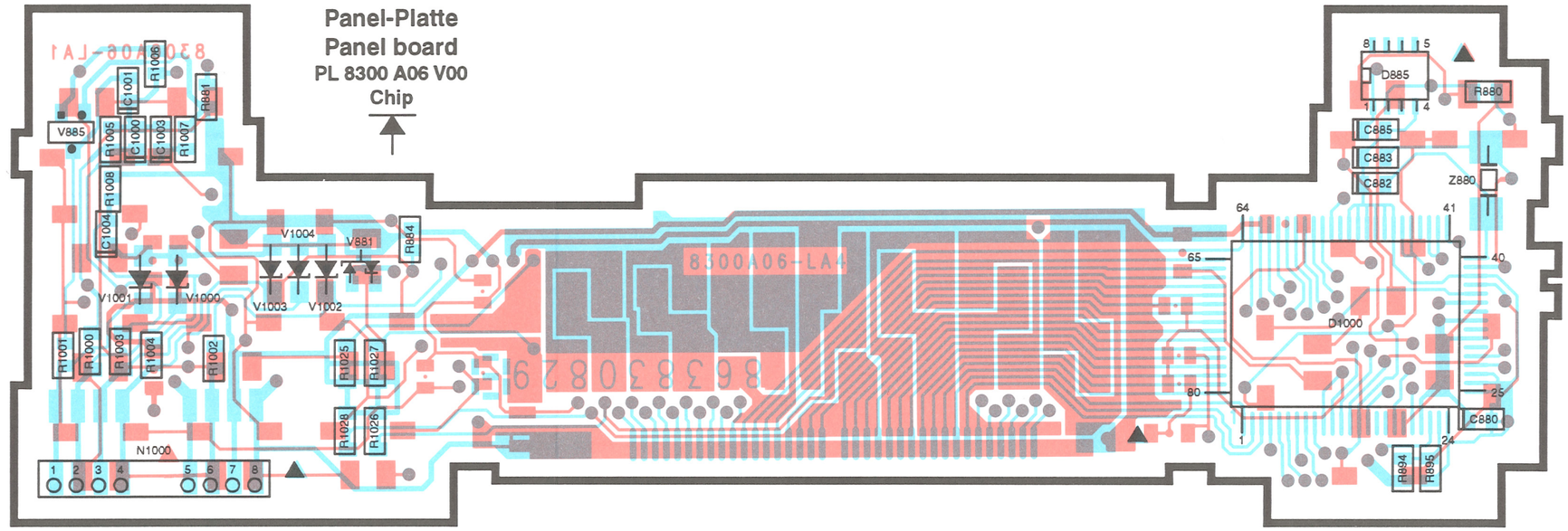

(1) Nur fuer Geraete mit AM

PL 8380 A7

HF-MODUL

TUNER

ZF

AM

PLL

HAUPTPLATTE MAINBOARD

(1) Nur fuer Geraete mit AM

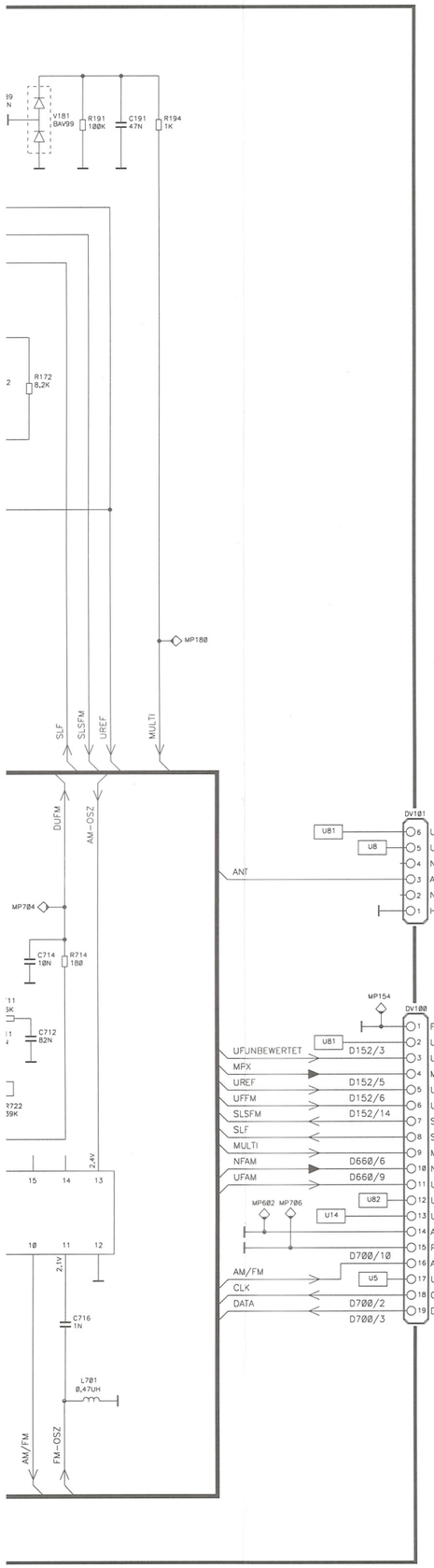

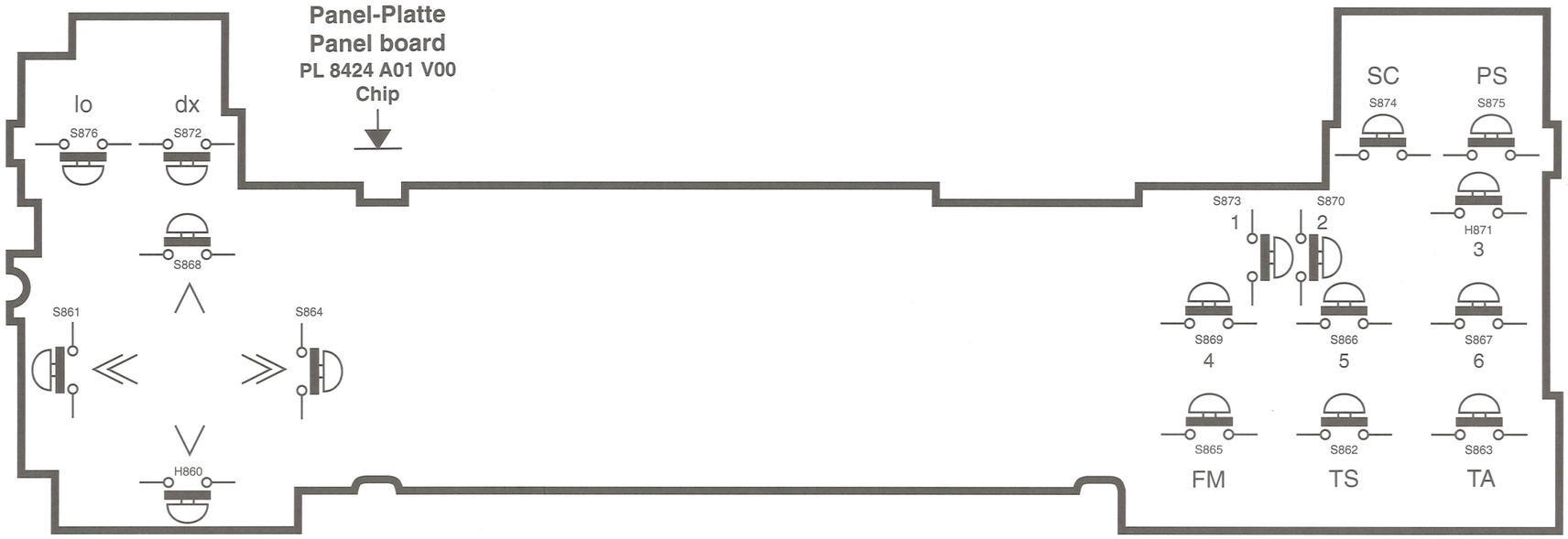

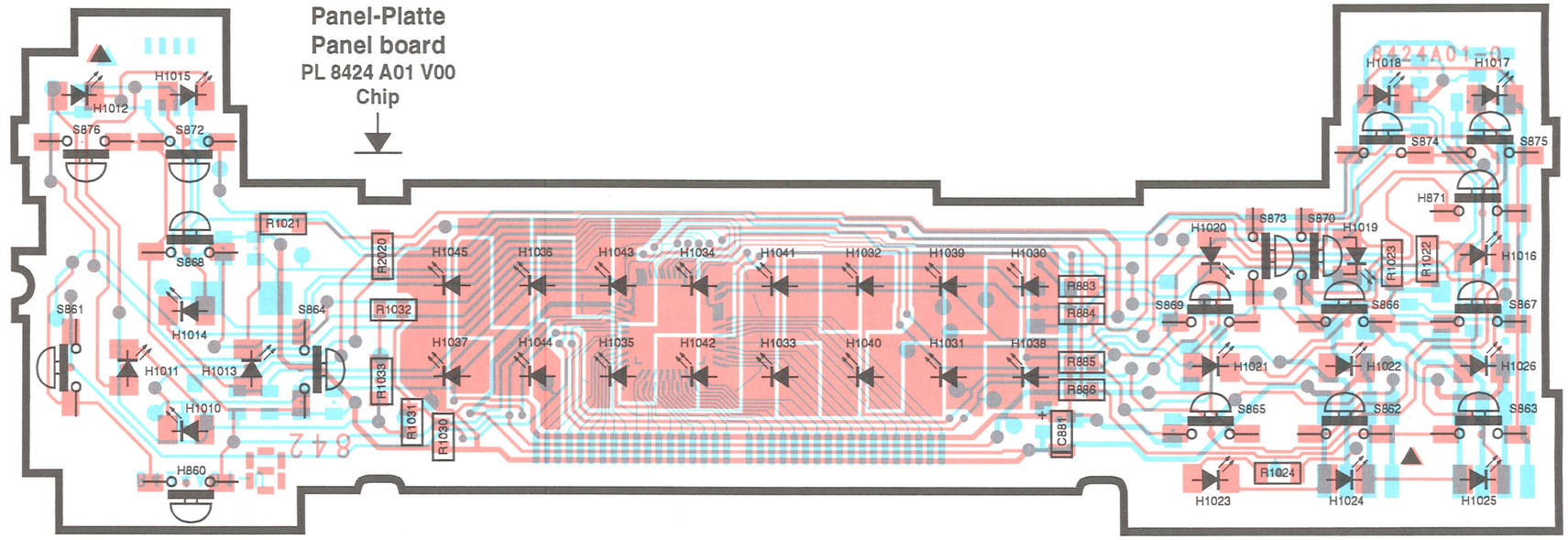

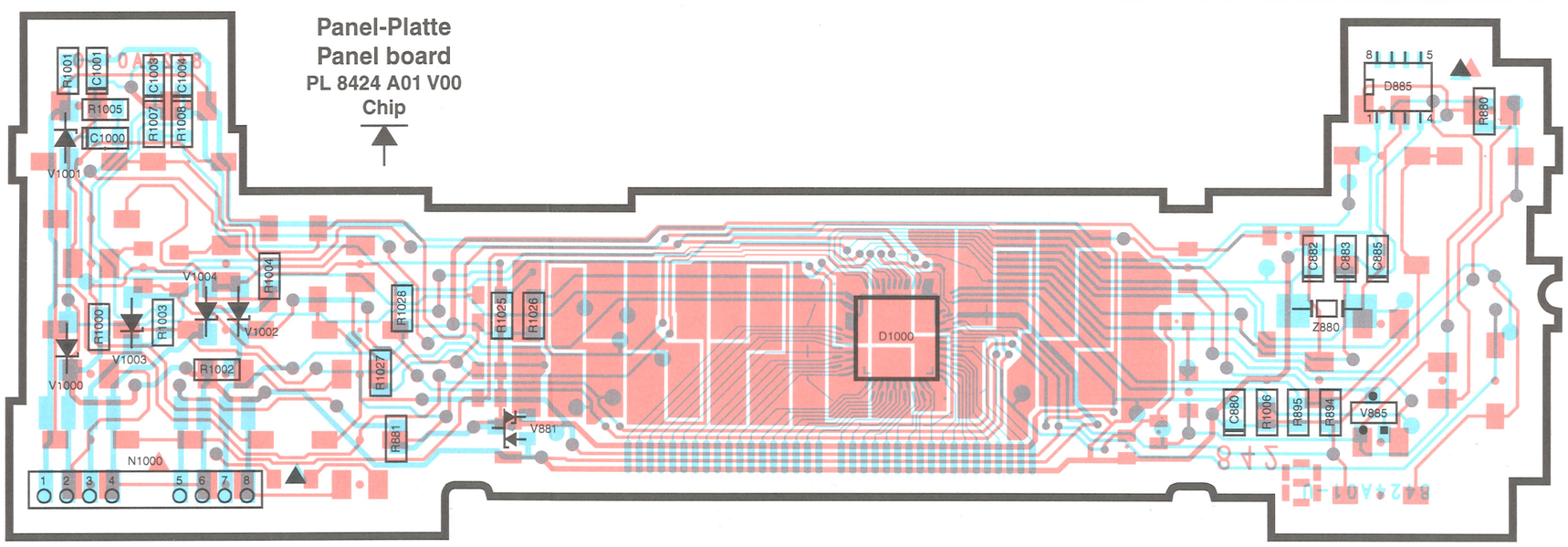

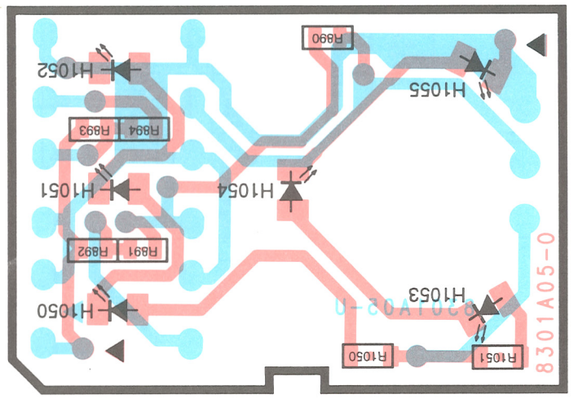

Schalterplatte
Keyboard
PL 8301 A05 V00
Chip

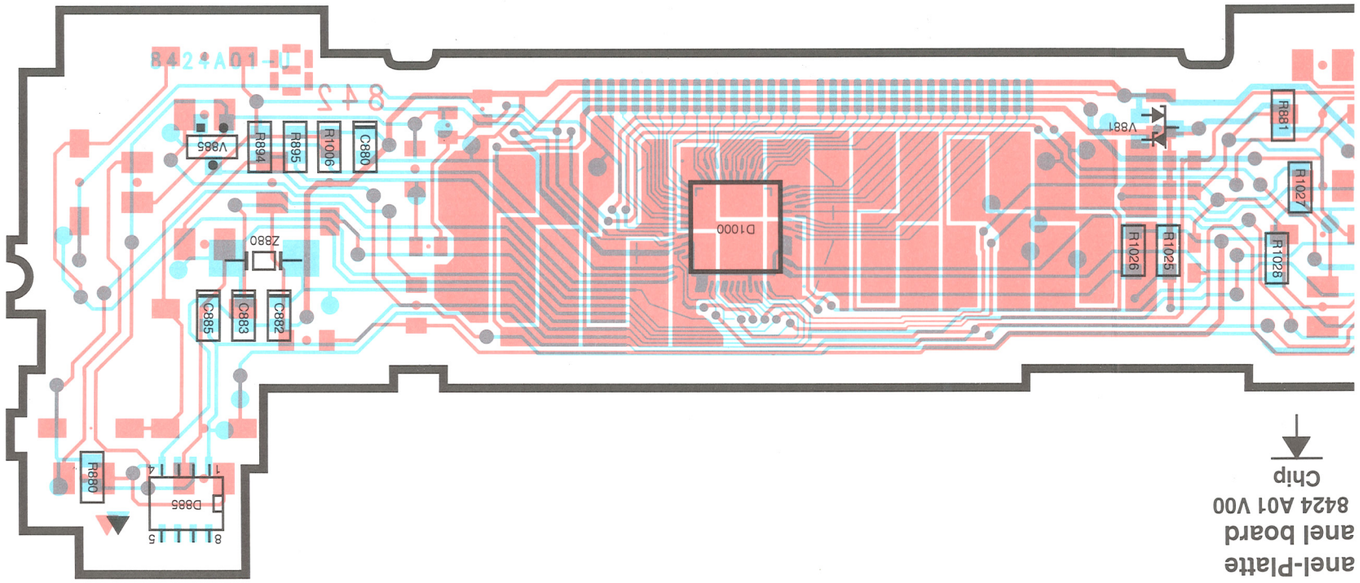

anel-Platte
anel board
8424 A01 V00
Chip

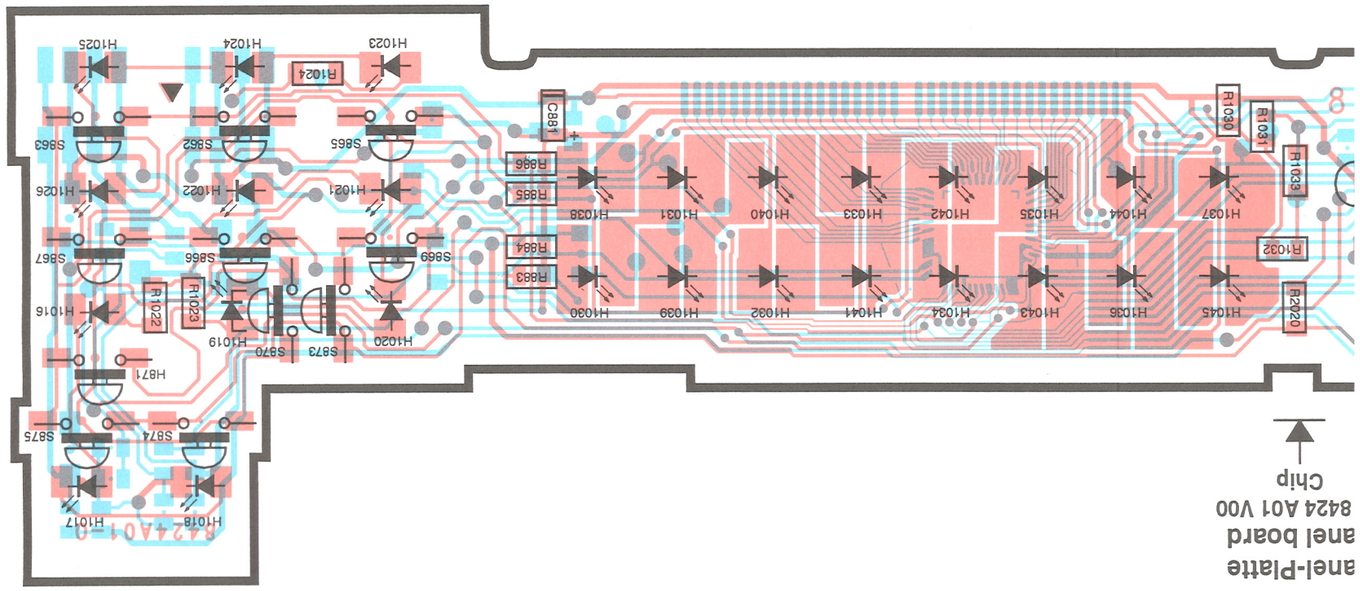

anel-Platte
anel board
8424 A01 V00
Chip

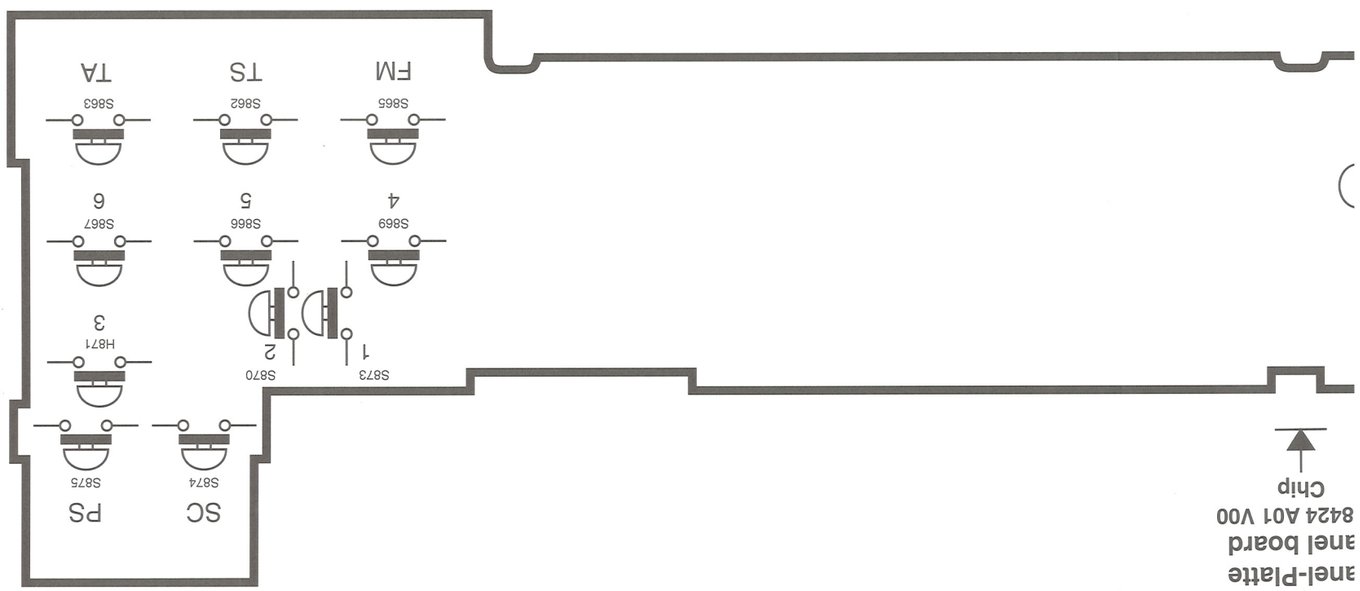

anel-Platte
anel board
8424 A01 V00
Chip

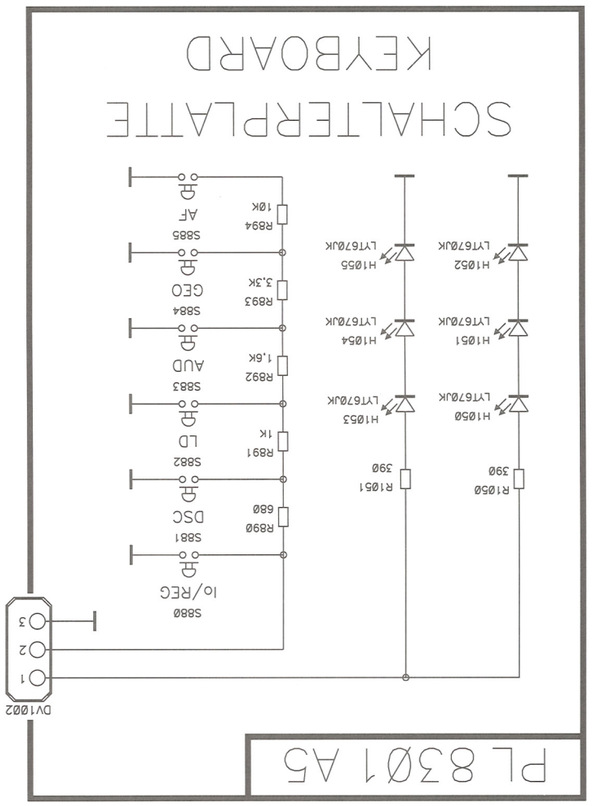

Blaupunkt-Werke GmbH, Hildesheim

Änderungen vorbehalten! Nachdruck - auch auszugsweise nur mit Quellenangabe gestattet.

Modification reserved! Reproduction - also by extract only permitted with indication of sources used.

Modification réservées! Reproduction - aussi en abrégépermise seulement avec indication des sources utilisées.

¡Modificaciónes reservadas¡ Reproducción - también en parte solamente permitida con indicación de las fuentes utilizadas.

Printed by Hagemann-Druck, 31106 Hildesheim

Anschlußplatte
Connector board
PL 8443 A02

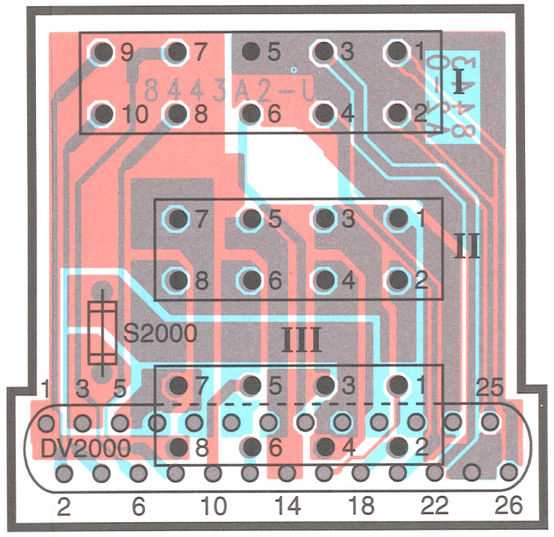

DV2000	
1 = GND	14 = BUS-GND
2 = LINE-OUT-LF	15 = UB-GESCH.
3 = UD	16 = SCI-TXD
4 = LINE-OUT-LR	17 = RF-
5 = U-ZUEND	18 = SCI-RXD
6 = LINE-OUT-RF	19 = RF+
7 = LR-	20 = TEL-MUTE
8 = LINE-OUT-RR	21 = RR-
9 = LR+	22 = SUB-OUT
10 = AA	23 = RR+
11 = LF-	24 = NF-GND
12 = UDIM / BEL	25 = LINE-IN-L
13 = LF+	26 = LINE-IN-R

Hauptplatte
Mainboard
PL 8483A04 V00

DV101
1 = HF-GND
3 = ANT
5 = UB
6 = UFM

DV100				
1 = FM-GND	5 = UREF	9 = MULTI	13 = U14	17 = U5
2 = UFM	6 = UF (FM)	10 = NF-AM	14 = AM-GND	18 = CLK-PLL
3 = UF-UNBEW.	7 = SLSFM	11 = UF-AM	15 = PLL-GND	19 = DATA-PLL
4 = MPX	8 = SLFast	12 = UAM	16 = AM / FM	

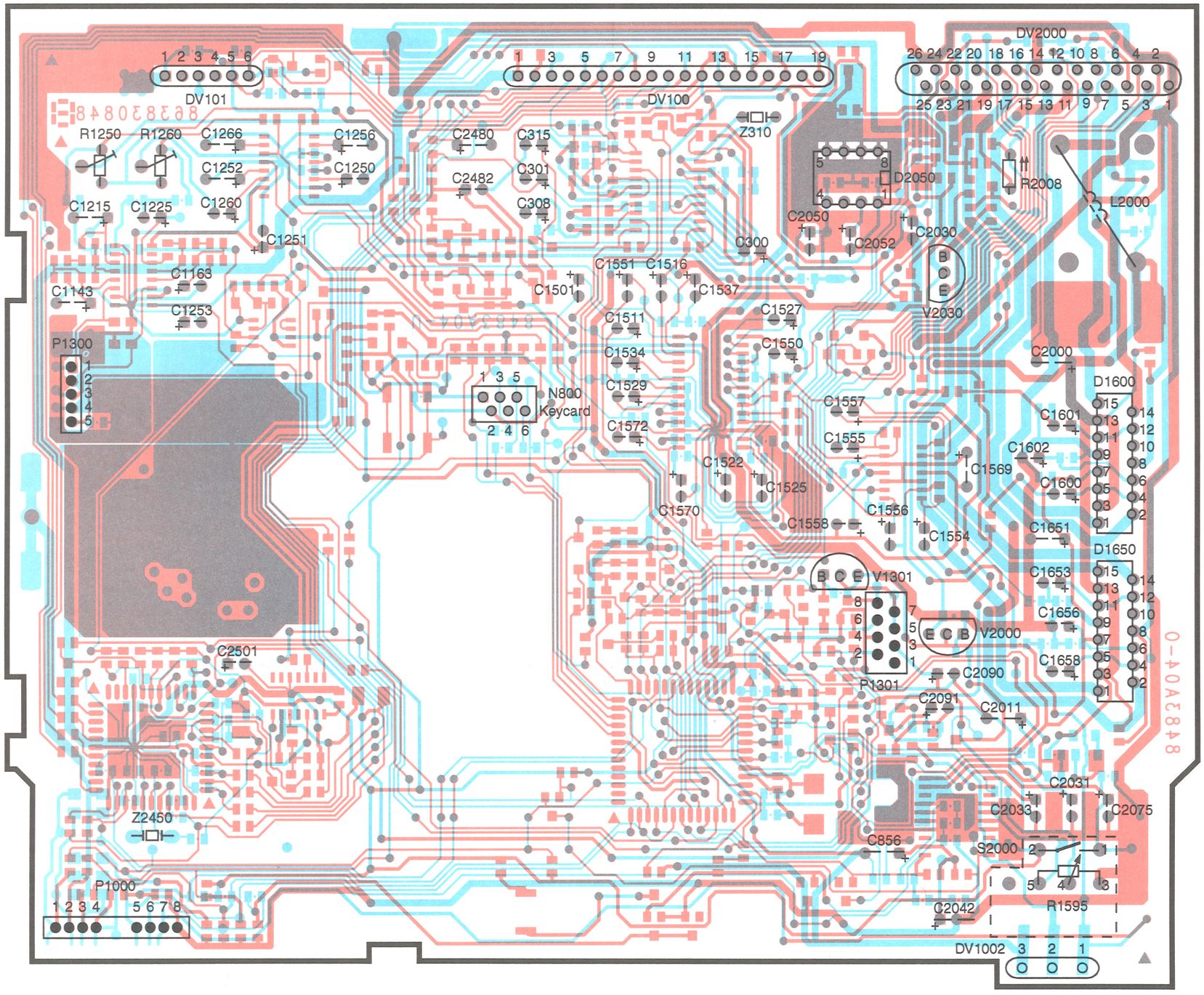

P1300
1 = L
2 = R
3 = CR02
4 = GND
5 = TR 1/2

N800
1 = VCC
2 = GND
3 = RST
5 = CLK
6 = KC-EIN/AUS

P1000
1 = RESET-GMC
2 = PIN
3 = SCL-PCM
4 = SDA-PCM
5 = EIN
6 = INT1
7 = U14.2
8 = GND

DV2000
1 = GND
2 = LINE-OUT-LF
3 = U14.1
4 = LINE-OUT-LR
5 = Z-EIN
6 = LINE-OUT-RF
7 = LR-
8 = LINE-OUT-RR
9 = LR+
10 = AA
11 = LF-
13 = LF+
14 = BUS-GND
15 = UB-GESCH.
16 = BUS-DATA
17 = RF-
18 = BUS-CLOCK
19 = RF+
20 = TELEFON-MUTE
21 = RR-
22 = AUX-IN
23 = RR+
24 = NF-GND
25 = LINE-IN-L
26 = LINE-IN-R

P1301
2 = CASS-IN
3 = U5.2
4 = GND
5 = TB-EIN
6 = CASS-MUTE
7 = TB-EIN
8 = CPS2

DV1002
1 = U14.2
2 = TAST1
3 = GND

Hauptplatte
Mainboard
PL 8483 A04 V00
Chip

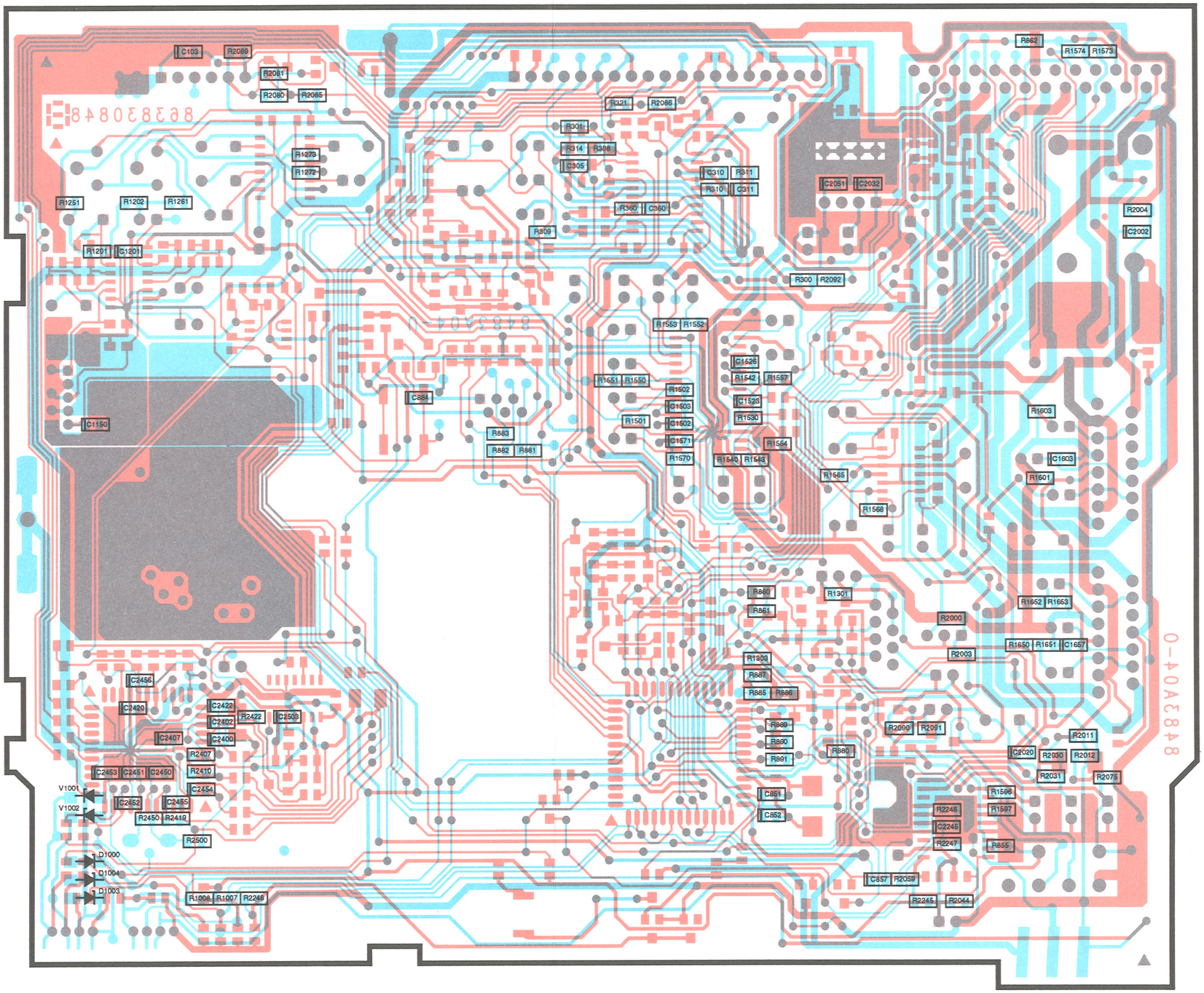

Hauptplatte
Mainboard
PL 8483 A04 V00
Chip

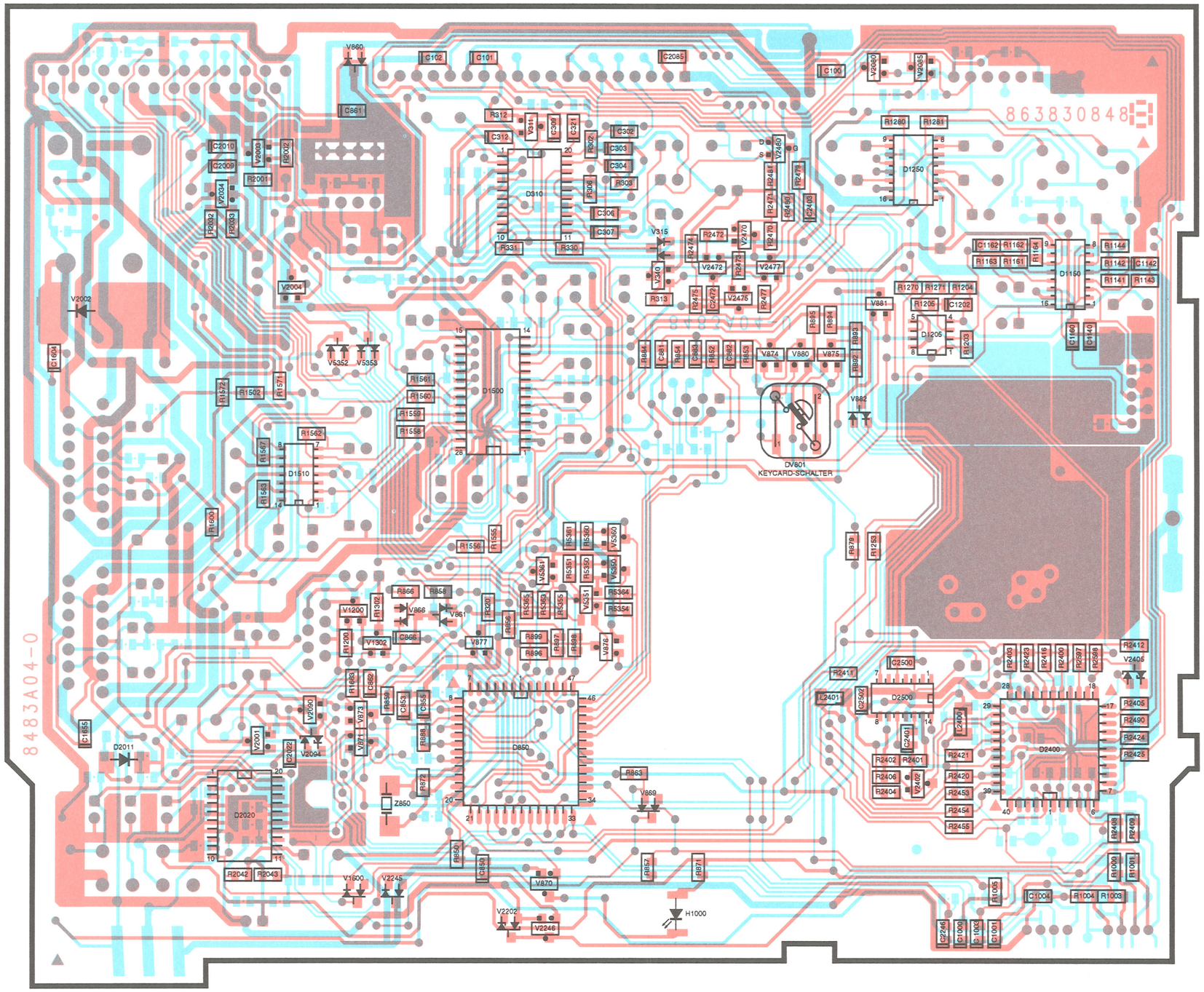

HF-Platte
RF board
PL 8380 A07 V00

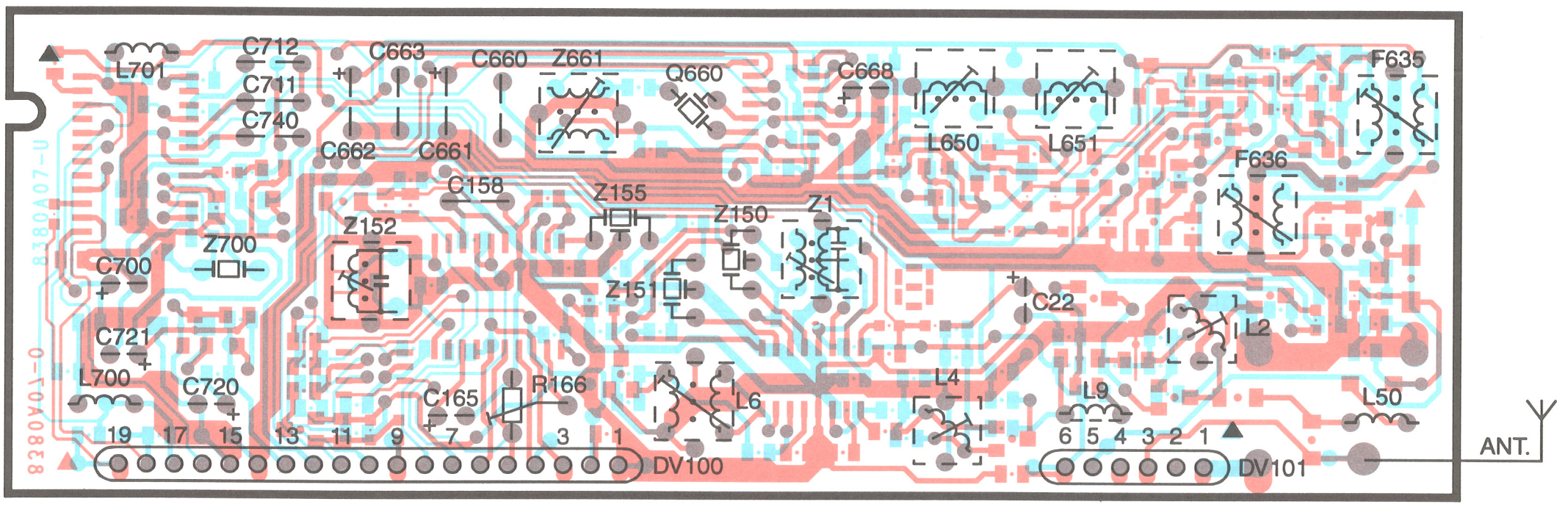

DV100					
1 = FM-GND	5 = U-REF	8 = SLF	11 = UF-AM	14 = AM-GND	17 = U5
2 = U-FM	6 = FM-UF	9 = MULTI	12 = U-AM	15 = AM / FM	18 = CLK-PLL
4 = MPX	7 = SLS-FM	10 = NF-AM	13 = U14	16 = PLL-GND	19 = DATA-PLL

DV101
1 = HF-GND
5 = U8.2
6 = U-FM

HF-Platte
RF board
PL 8380 A07 V00
Chip

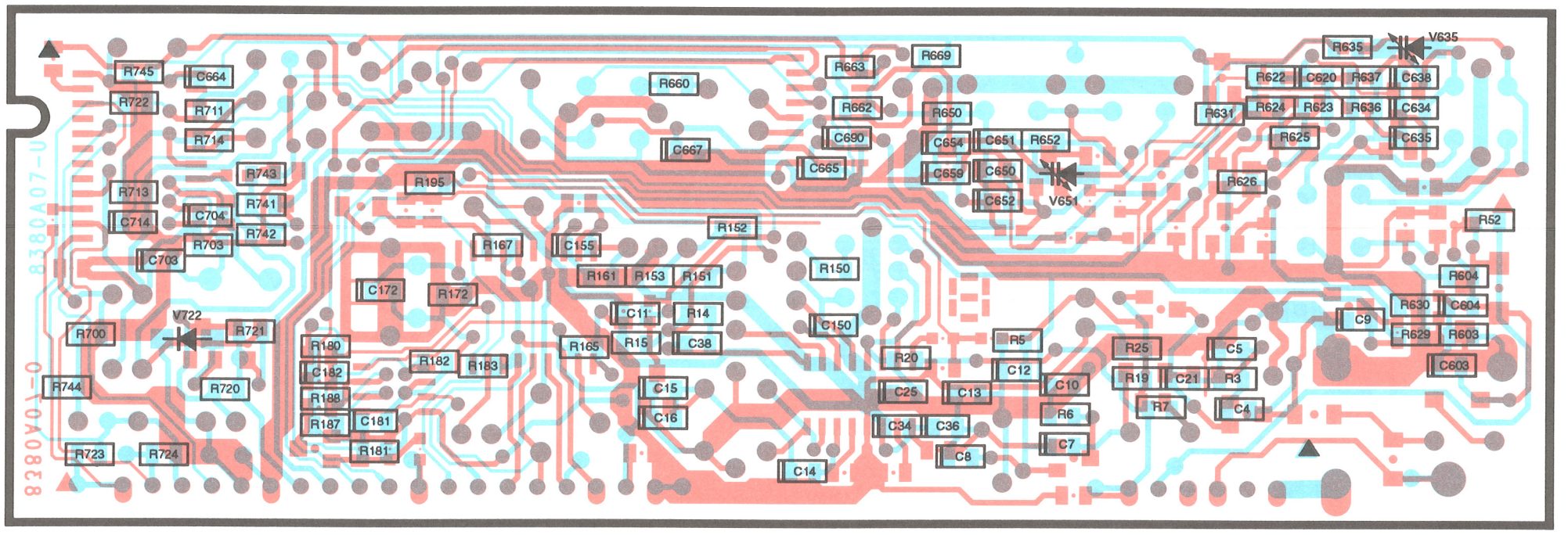

HF-Platte
RF board
PL 8380 A07 V00
Chip

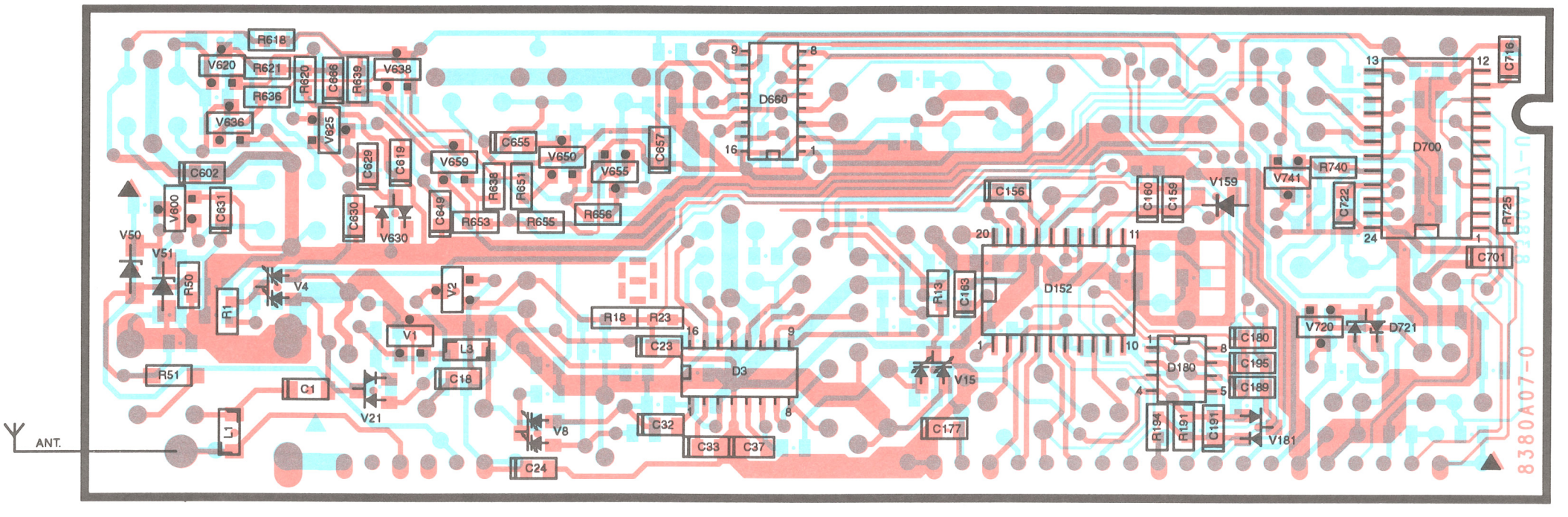

RELEASE PANAL

RELEASE PANAL / PANAL

PANEL-SCHNITTSTELLE

FM / AM-TUNER

FM / AM-TUNER

STEREO-DECODER/ASU

NF-STELLER
AF-CONTROLLER

RDS-FILTER

RDS

POTI

POTI

TBB

MPX
UFFM
SLSFM
SLF
MULTI
NFAM
UFAM
CLK
DATA
STAN
NFAM
MPX
MPX
RDS-MUTE
ZWANGSMONO
NFTB-R
NFTB-L
INT1
RESET-RDS
ZWANGSMONO
WT
SLF
RDS-MUTE
TR1/2
METALL-ON
NFCDIN-R
NFCDIN-L
SDANF
SCLNF
Rdf-L
Rdf-R
LINE-IN-R
LINE-IN-L
RR
RF
LR
LF

PL 8483 A4

NF-STELLER
AF-CONTROLLER

VORVERSTAERKER
PREAMPLIFIER

ENDSTUFEN
AMPLIFIER

HAUPTPLATTE
MAIN-BOARD

(1) nur Geraete mit AM
(3) nur Geraete mit DMS
(4) nur Geraete mit LINE-OUT
(5) nur Geraete mit CPS
(6) nur Geraete mit Dolby
(7) nur Geraete mit Keycard
(8) nur Geraete mit Releasepanel
(9) nur Geraete ohne AM
(11) nur Geraete ohne Dolby

D1500 TDA7318
D1510 MC33079D
D1650
D1600
TDA7375V
D2400 TMS375C086
D1150 TDA7334
D1250 HA12135AFP
D1205 RC4558
TB-STEUERUNG
CDS101X
TB-VERSTAERKER
RDS
CPS
DOLBY
CDS 101 X

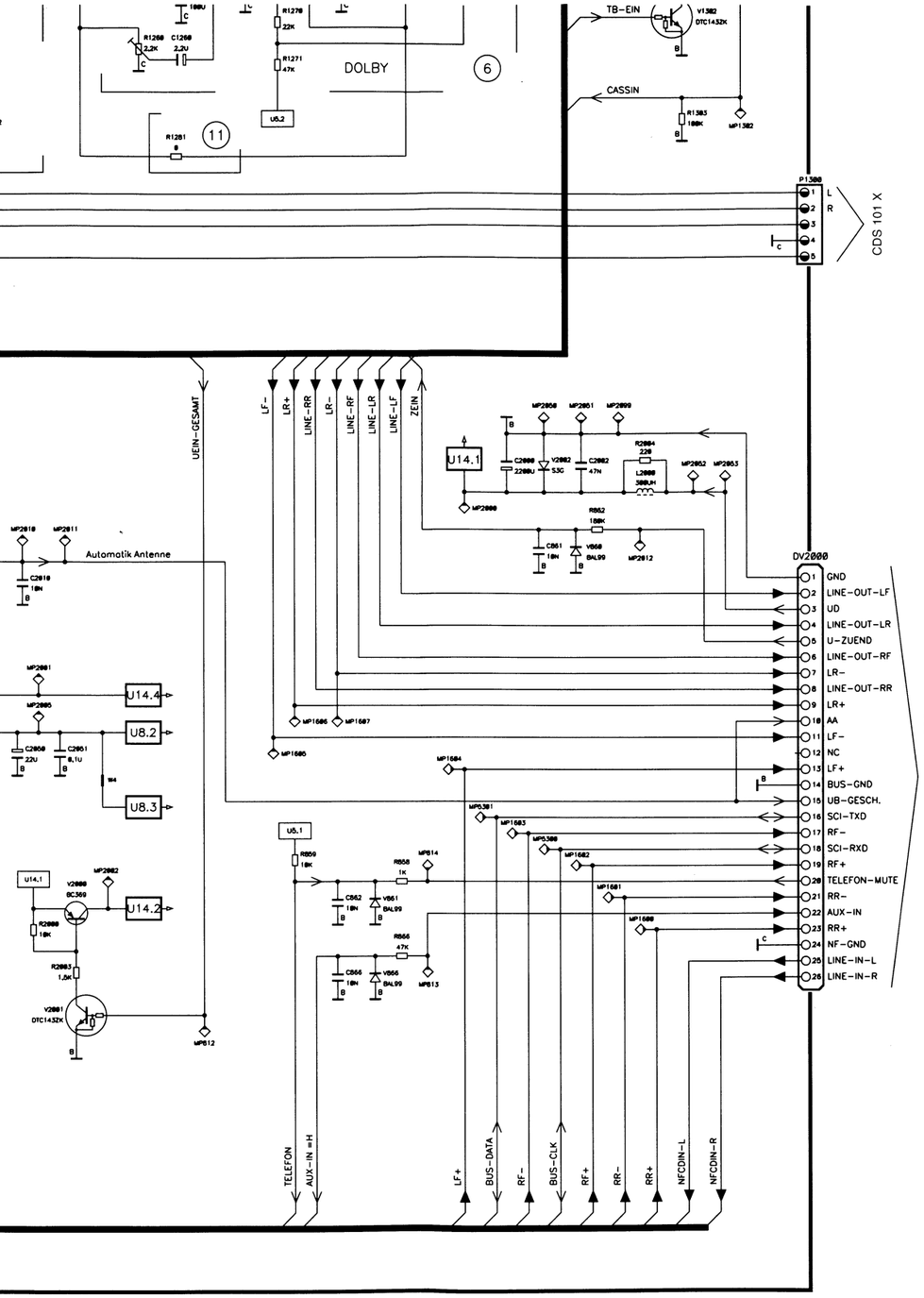
DOLBY
TB-EIN
CASSIN
CDS 101 X
UEIN-GESAMT
Automatik Antenne
ANSCHLUSSPLATTE
SUPPLY BOARD
DV2000
GND
LINE-OUT-LF
UD
LINE-OUT-LR
U-ZUEND
LINE-OUT-RF
LR-
LINE-OUT-RR
LR+
AA
LF-
NC
LF+
BUS-GND
UB-GESCH.
SCI-TXD
RF-
SCI-RXD
RF+
TELEFON-MUTE
RR-
AUX-IN
RR+
NF-GND
LINE-IN-L
LINE-IN-R
TELEFON
AUX-IN =H
BUS-DATA
BUS-CLK
NFCDIN-L
NFCDIN-R

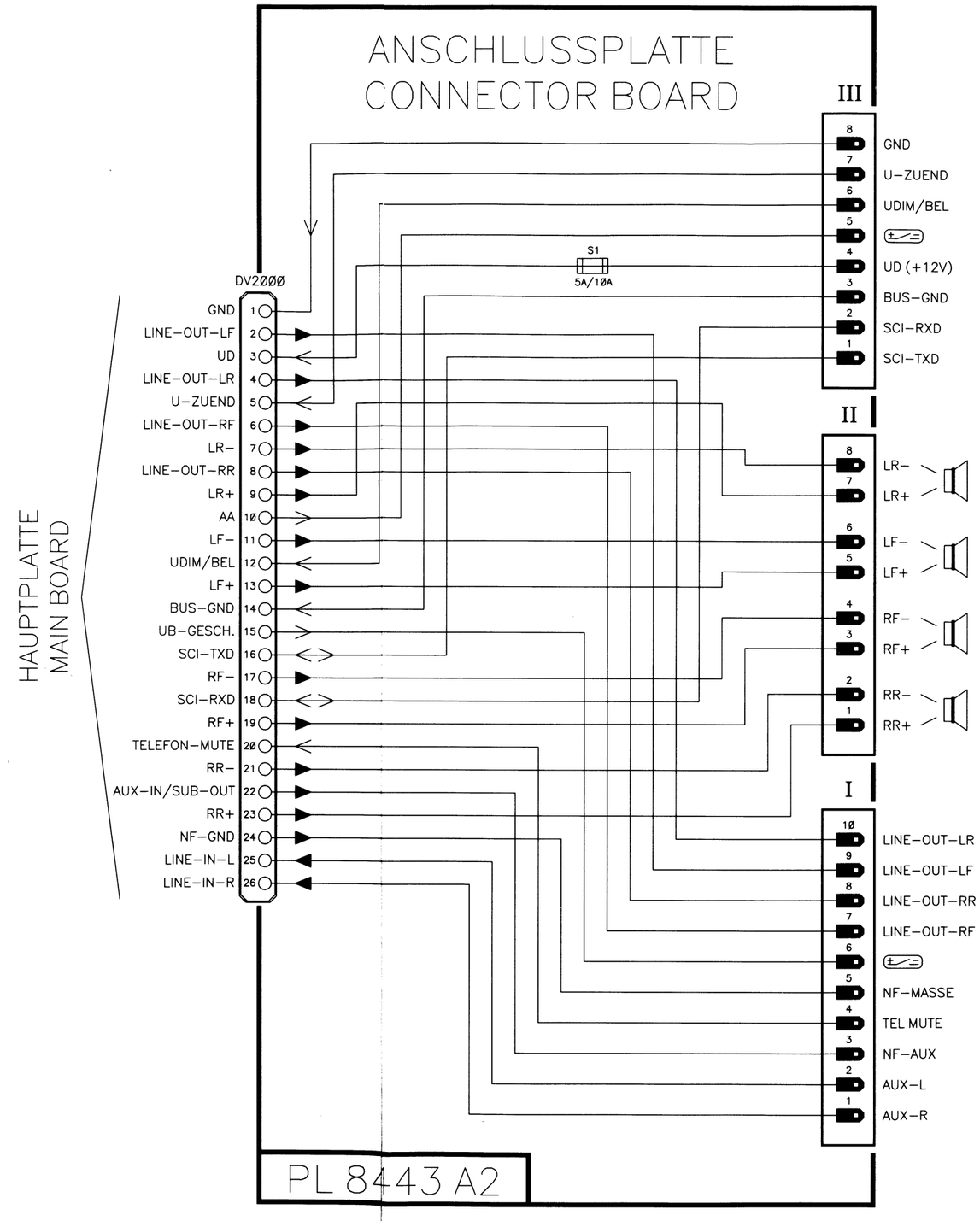
ANSCHLUSSPLATTE
CONNECTOR BOARD
HAUPTPLATTE
MAIN BOARD
DV2000
S1
5A/10A
GND
LINE-OUT-LF
UD
LINE-OUT-LR
U-ZUEND
LINE-OUT-RF
LR-
LINE-OUT-RR
LR+
AA
LF-
UDIM/BEL
LF+
BUS-GND
UB-GESCH.
SCI-TXD
RF-
SCI-RXD
RF+
TELEFON-MUTE
RR-
AUX-IN/SUB-OUT
RR+
NF-GND
LINE-IN-L
LINE-IN-R
III
GND
U-ZUEND
UDIM/BEL
UD (+12V)
BUS-GND
SCI-RXD
SCI-TXD
II
LR-
LR+
LF-
LF+
RF-
RF+
RR-
RR+
I
LINE-OUT-LR
LINE-OUT-LF
LINE-OUT-RR
LINE-OUT-RF
NF-MASSE
TEL MUTE
NF-AUX
AUX-L
AUX-R
PL 8443 A2

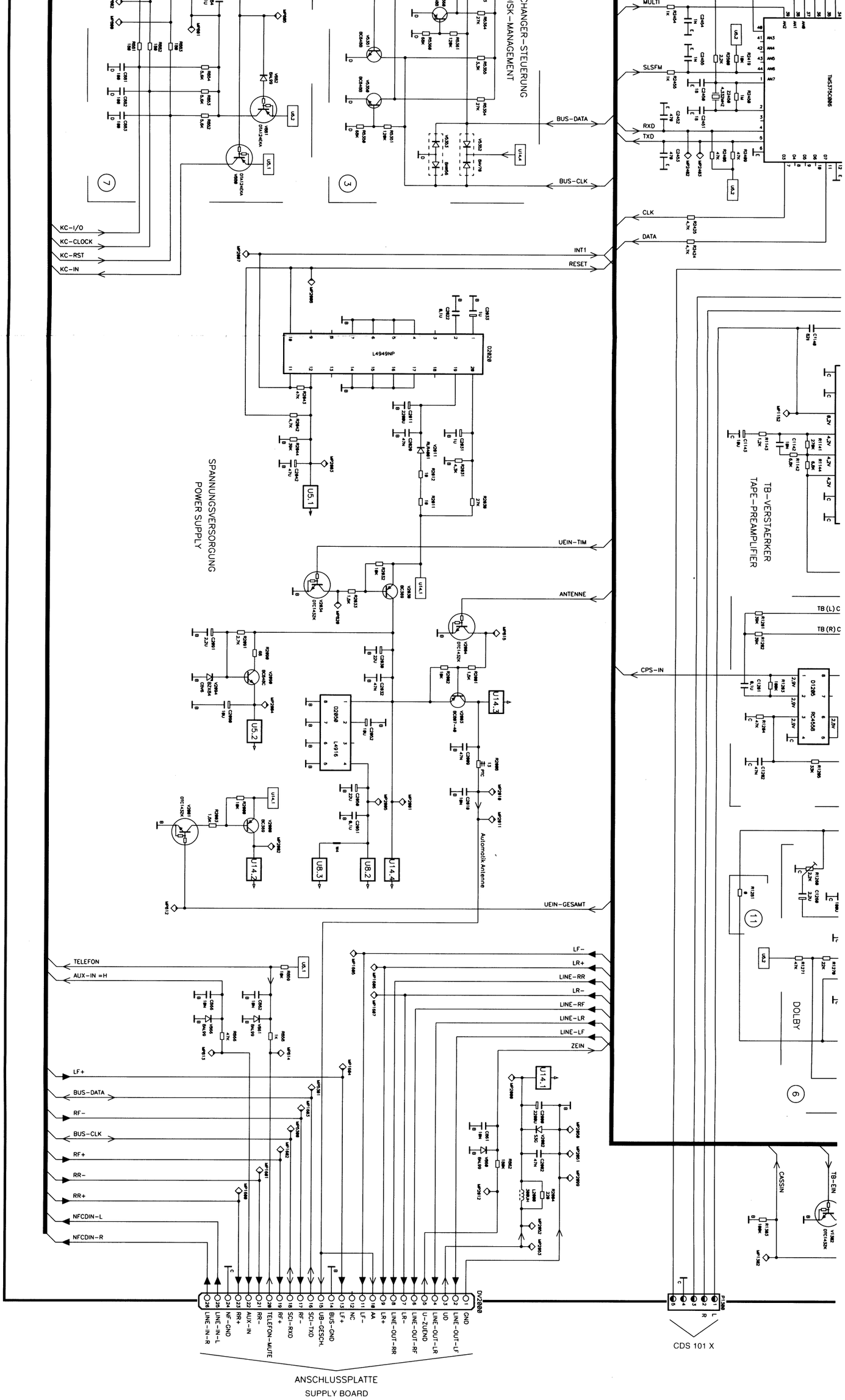
CHANGER-STEUERUNG
DISK-MANAGEMENT
BUS-DATA
BUS-CLK
KC-I/O
KC-CLOCK
KC-RST
KC-IN
INT1
RESET
MULTI
SLSFM
RXD
TXD
CLK
DATA
L4949NP
SPANNUNGSVERSORGUNG
POWER SUPPLY
UEIN-TIM
ANTENNE
CPS-IN
TB-VERSTAERKER
TAPE-PREAMPLIFIER
TB (L) C
TB (R) C
Automatik Antenne
UEIN-GESAMT
DOLBY
TELEFON
AUX-IN =H
LF+
BUS-DATA
RF-
BUS-CLK
RF+
RR-
RR+
NFCDIN-L
NFCDIN-R
LF-
LR+
LINE-RR
LR-
LINE-RF
LINE-LR
LINE-LF
ZEIN
CASSIN
TB-EIN
DV2000
GND
LINE-OUT-LF
LINE-OUT-RF
U-ZUEND
LINE-OUT-LR
UD
LINE-OUT-RF
LR-
LINE-OUT-RR
LR+
AA
LF-
NC
BUS-GND
LF+
UB-GESCH.
SCI-TXD
RF-
SCI-RXD
RF+
TELEFON-MUTE
AUX-IN
RR-
NF-GND
RR+
LINE-IN-L
LINE-IN-R
ANSCHLUSSPLATTE
SUPPLY BOARD
CDS 101 X
HAUPTPLATTE
MAIN BOARD

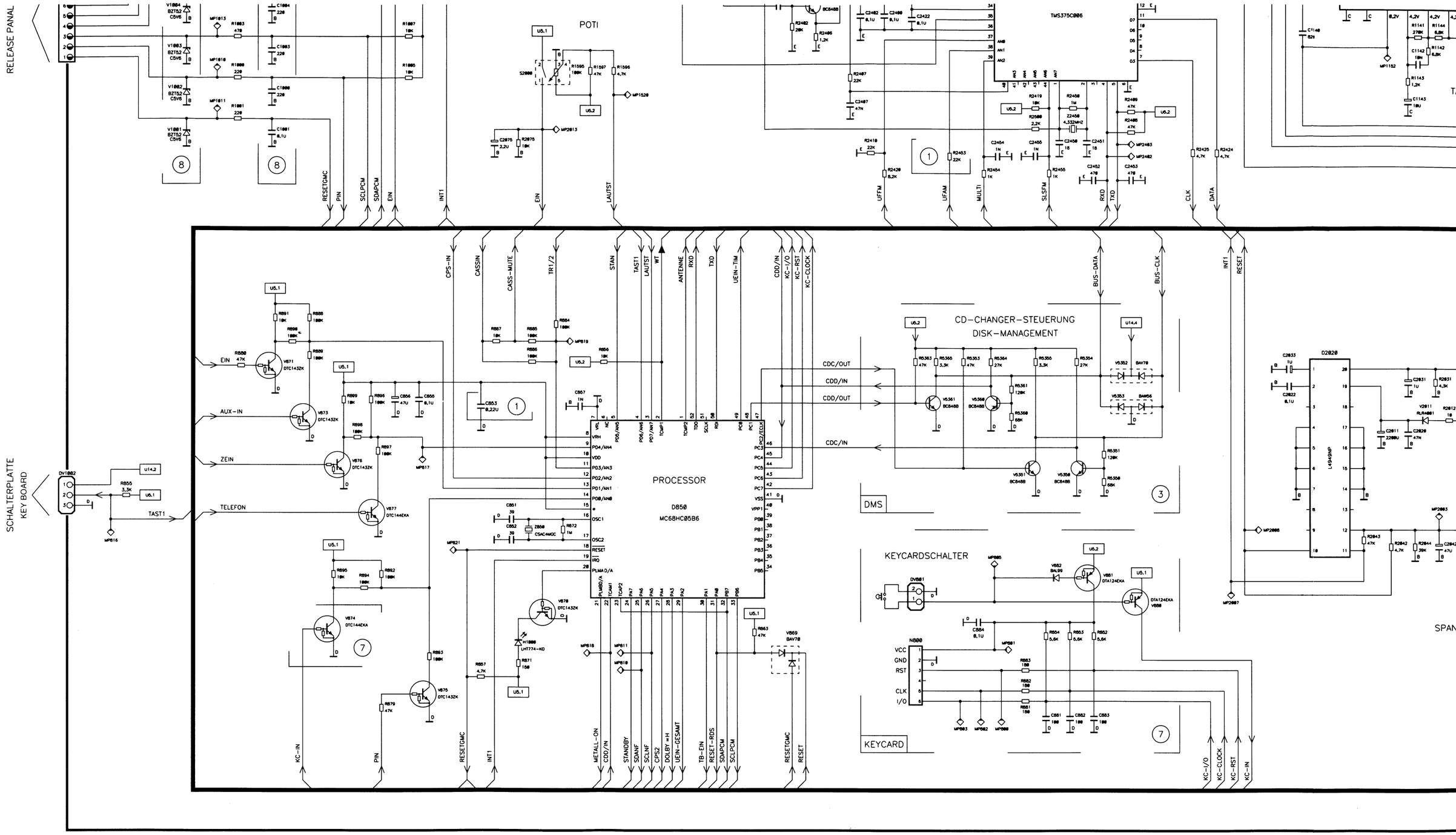
RELEASE PANAL
SCHALTERPLATTE
KEY BOARD
POTI
TMS375C006
PROCESSOR
D850
MC68HC05B6
CD-CHANGER-STEUERUNG
DISK-MANAGEMENT
DMS
KEYCARDSCHALTER
KEYCARD
D2020
L4949NP
SPAN
EIN
AUX-IN
ZEIN
TELEFON
TAST1
RESETGMC
PIN
SCLPCM
SDAPCM
INT1
LAUTST
UFFM
UFAM
MULTI
SLSFM
RXD
TXD
CLK
DATA
CPS-IN
CASSIN
CASS-MUTE
TR1/2
STAN
ANTENNE
UEIN-TIM
CDD/IN
KC-I/O
KC-RST
KC-CLOCK
BUS-DATA
BUS-CLK
RESET
CDC/OUT
CDD/OUT
CDC/IN
METALL-ON
STANDBY
SDANF
SCLNF
CPS2
DOLBY=H
UEIN-GESAMT
TB-EIN
RESET-RDS
SDAPCM
SCLPCM
KC-IN
VCC
GND
RST
CLK
I/O